CAM3351E4-5

2 Megapixel 30M IR Day/Night Outdoor Bullet Network Camera

Network Camera

- 2 Megapixel Progressive Scan Sensor
- Up to 1920 x 1080 Video Resolution
- H.265/H.264/MJPEG Triple Simultaneous Streams
- Power over Ethernet (IEEE 802.3af)
- Auto Day/Night Function with IR-Cut Filter
- Advanced ISP Function (HLC, DWDR, ROI, 2D/3D De-noise, Defog, Privacy Mask)
- Built-in IR Illuminators, Effective Up to 30 Meters
- IP67 and Wide Temperature for Outdoor Application
- Corridor Mode Support

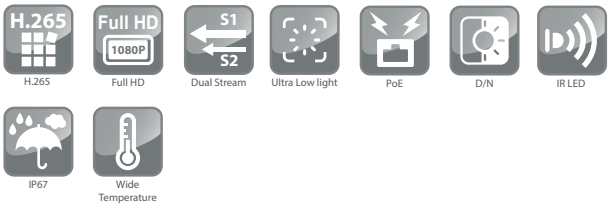

Product Specification

Camera	
Image Sensor	1/2.7" megapixelprogressive scan CMOS
Lens	f4.0 mm, F1.8
SNR	52dB
WDR	Yes (DWDR)
Day/Night ICR	Yes
IR LED	Yes (30M)
Min Illumination	0.005 Lux @ F1.8 (Color) 0 Lux with IR on
Iris Control	Fixed
Shutter time	1/6 ~ 1/100000 s
Viewing Angle	(H)86.5° (V)44.1° (O)106.4°
Camera Angle Adjustment	Pan: 0°~360° Tilt: 0°~90° Rotate:0°~360°
Pan/Tilt/Zoom Functionalities	N/A
Video	
Video Compression	H.265/H.264/MJPEG
Resolution	Up to 1920 x 1080
Frame Rate	30 fps at 1080P (1920 x 1080) 30 fps at D1 (720 x 576)
Video stream	H.265/H.264/MJPEG Triple simultaneous streams
Bit Rate	64K ~ 10Mbps, VBR, CBR, controller frame rate and quality
Video Control	AGC (Auto Gain Control), AWB (Auto White Balance), BLC (Back Light Compensation), 2D/3D Noise Reduction, Digital Image Stabilization, Image Defog Feature, Image adjustment, Privacy zone: On/Off (16 zones)
Video Analytics	Camera Motion Detection
Video Jack	N/A
9:16 Corridor Mode	Yes

Audio	
Audio Compression	8KHz, G.711
Audio Input/ Output	N/A
I/O and Event Management	
Alarm In	1, terminal block
Alarm Out	1, terminal block
Video Buffer	N/A
Event Action	Tampering Alarm, Alarm input, Alarm output
Network	
Supported Protocols	IPv4, IGMP, ICMP, ARP, TCP, UDP, DHCP, PPPoE, RTP, RTSP, RTCP, DNS, DDNS, NTP, FTP, UPnP, HTTP, HTTPS, SMTP, 802.1x, SNMP
Ethernet	10M/100M Base-T / RJ45
System	
Local Storage	N/A
RS-485	N/A
USB	N/A
SDK	HTTP API
General	
Temperature	Operation: -35°C ~ +60°C (-31°F ~ 140°F)
Humidity	10%~95% RH
Power	12 V DC±25%, PoE (IEEE802.3 af)
Power Consumption	Max 6.4W
Dimension	157.3 ×63 ×62.4mm (6.2″× 2.5″× 2.5″)
Weight	0.45 kg (0.99lb)
Certification	CE, IP67
Warranty	2 years

* All specifications are subject to change without notice.
* All brand names and registered trademarks are the property of their respective owners.

CAM3351E4-5

2 Megapixel 30M IR Day/Night
Outdoor Bullet Network Camera

Dimensions

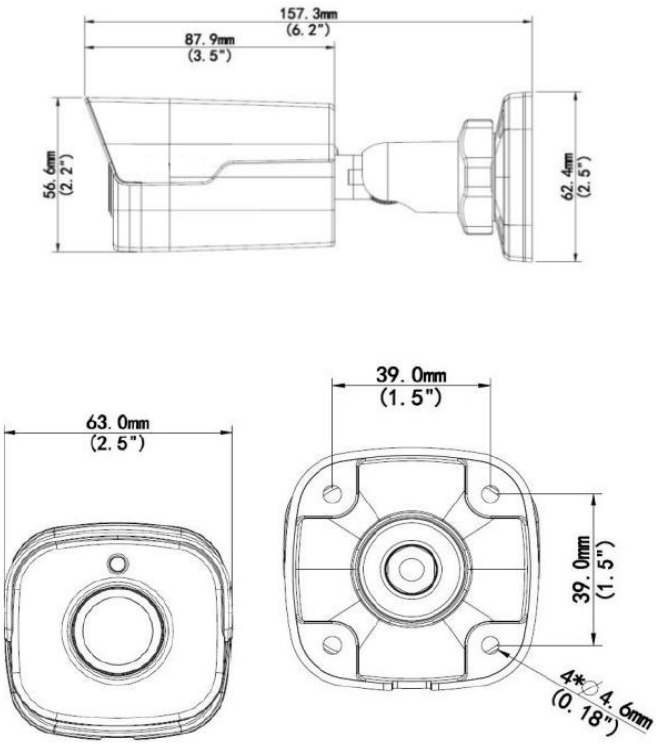

Ordering Information

Part Number	Description
CAM3351E4-5-0015	2 Megapixel Day/Night IR Bullet Network Camera with f4.0mm@F1.8 Lens

Optional Accessories

Part Number	Description
ZPWR18W-0030	Power Adapter, 12VDC, 1.5A; 18W
YBPICC0001G0	PoE Injector, 15.4W, 10/100M